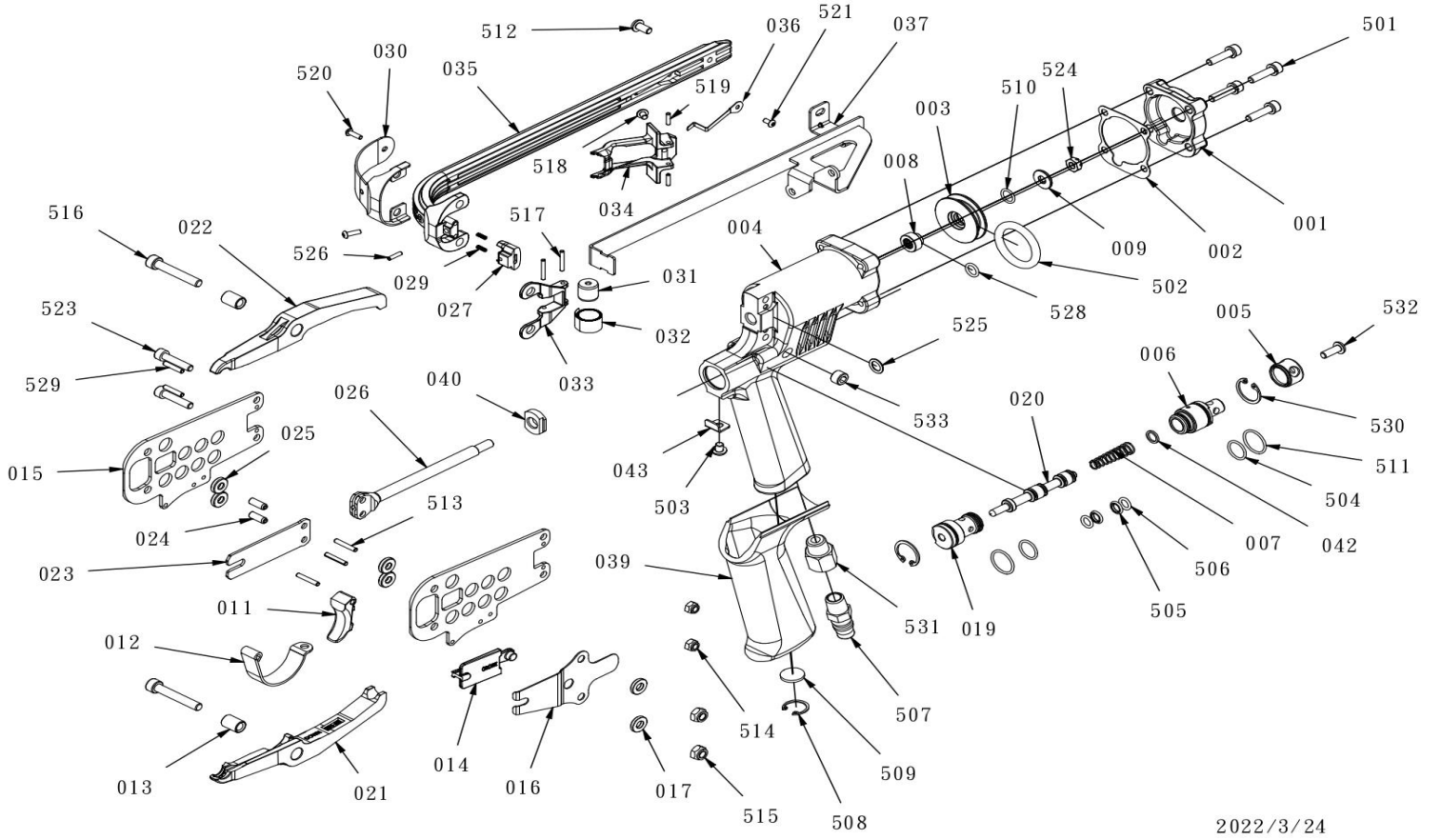

HR743		NOTE: When ordering spare parts. Please state the part name and part number.									
Item	Everwin No.	Description	Q'ty	Item	Everwin No.	Description	Q'ty	Item	Everwin No.	Description	Q'ty
001	XM10001	CAP	1	027	XM10422	SHOE, MAGAZINE	1	512	XM10045	HEX.SOC.BUTTON HD. CAP SCREW	1
002	XM10002	PACKING	1	029	XM10423	SPRING	2	513	XM10046	SPRING PIN	3
003	XM10990	PISTON	1	030	XM10424	GUARD	1	514	XM10047	LOCK NUT	2
004	XM10991	BODY UNIT	1	031	XM10425	ROLLER	1	515	XM10048	LOCK NUT	2
005	XM10005	DEFLECTOR	1	032	XM10426	SPRING	1	516	XM10049	HEX.SOC.HD.BOLT	2
006	XM11100	SEAT, REAR VALVE	1	033	XM10028	BRACKET	1	517	XM10050	SPRING PIN	2
007	XM10404	SPRING	1	034	XM10029	PUSHER	1	518	XM10051	HEX.SOC.BUTTON HD. CAP SCREW	1
008	XM10405	PISTON BUSH	1	035	XM10429	MAGAZINE BODY	1	519	XM11101	SPRING PIN	2
009	XM10406	PISTON WASHER	1	036	XM10031	CLIP	1	520	XM10456	HEX.SOC.BUTTON HD. CAP SCREW	2
011	XM10407	TRIGGER	1	037	XM10992	RAIL	1	521	XM10457	HEX.SOC.BUTTON HD. CAP SCREW	1
012	XM10408	GUARD, TRIGGER	1	039	XM10034	GRIP	1	523	XM10055	HEX.SOC.HD.BOLT	2
013	XM10010	BUSHING	2	042	XM10433	VALVE SPRING WASHER	1	524	XM10459	LOCK NUT	1
014	XM10410	LATCH	1	043	XM10434	TRIGGER BLOCK	1	525	XM10057	O-RING	1
015	XM10411	SIDE PLATE	2	501	XM10037	HEX.SOC.BUTTON HD. CAP SCREW	4	526	XM10058	SPRING PIN	1
016	XM10013	SPRING, LATCH	1	502	XM10038	O-RING	1	528	XM10059	O-RING	1
017	XM10014	WASHER	2	503	XM10039	HEX.SOC.BUTTON HD. CAP SCREW	1	529	XM10060	SPRING PIN	2
019	XM10414	SEAT, FRONT VALVE	1	504	XM10040	O-RING	2	530	XM10061	C-RING	2
020	XM10415	SPACER	1	505	XM10041	O-RING	2	532	XM10039	HEX.SOC.BUTTOM HD.CAP SCREW	1
021	XM10416	JAW, LOWER	1	506	XM10042	O-RING	2	533	XM10779	HEX. SOC. SET SCREW	1
022	XM10417	JAW, UPPER	1	508	XM10043	C-RING	1				
023	XM10418	BLADE	1	509	XM10044	SILENCER	1				
024	XM10419	PIN	2	510	XM10446	O-RING	1				
025	XM10021	ROLLER	4	511	XM10447	O-RING	2				